Waldmann
ENGINEERS OF LIGHT

SUBMITTAL DRAWING
6′ CONTINUOUS RUN PENDANT

PROJECT

AGENCY

DISTRIBUTOR

NOTES

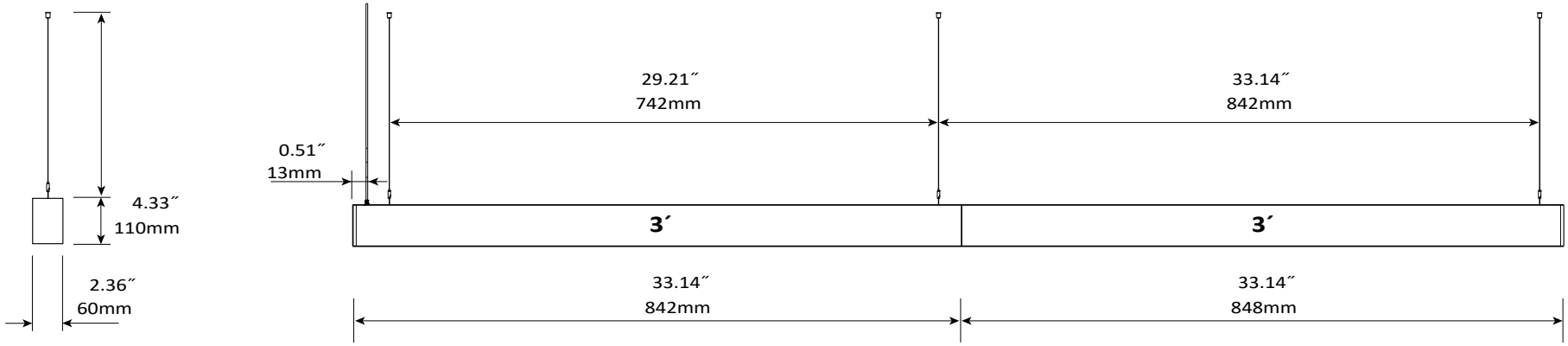

TYPE

QUANTITY

ORDER CONFIGURATION

(See Spec Sheet)

* For Emergency Fixtures Mark Above with EM

Waldmann Lighting Company 9 Century Dr Wheeling, Illinois 60090 waldmannlighting.com Phone (847) 520 1060 Fax (847) 520 1730 waldmann@waldmannlighting.com