Universal Task Luminaire

MINELA - SOL 1 WHITE 112929000-00605360

Waldmann
ENGINEER OF LIGHT.

fitted with	1 x LED warm white, 3000 K, Color Rendering Index (CRI)=85
work equipment	electronic plug-in transformer
connected load	100-240 V; 50/60 Hz
power consumption	approx. 7 W
light distribution	direct
glare-free	without
system of protection	IP 20
class of protection	II
technology	continuously dimmable
usage	Touch-LED
luminaire body	
material	sectional aluminum
surface	white
lamp cover	acrylic clear
tubular sections	
material	steel tube/metal flexible tube
surface	painted
mains lead	approx. 8.2' [2.5 m]; NEMA 1-15P plug also includes plugs: BS 1363, CEE 7/XVI
cable outlet	lateral
fastening	screw-down flange, magnetic base (accessory), table clamp (accessory), wall bracket (accessory)

NEMA 1-15P

illuminance

measuring conditions: d=50cm

Em: **268 lx**
Emax: 575 lx
Emin: 87 lx

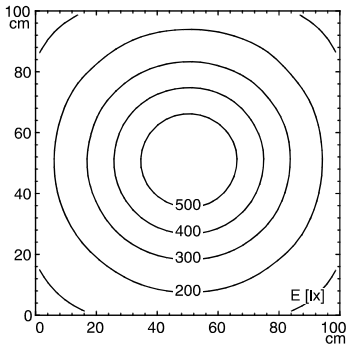

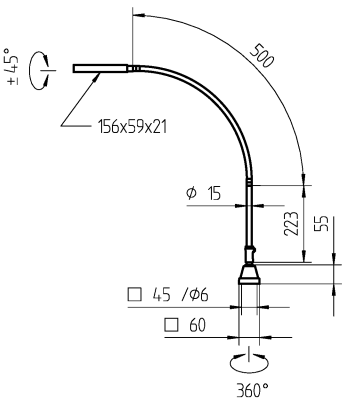

© 09.2013 H. Waldmann GmbH & Co. KG